Micro USB Connector

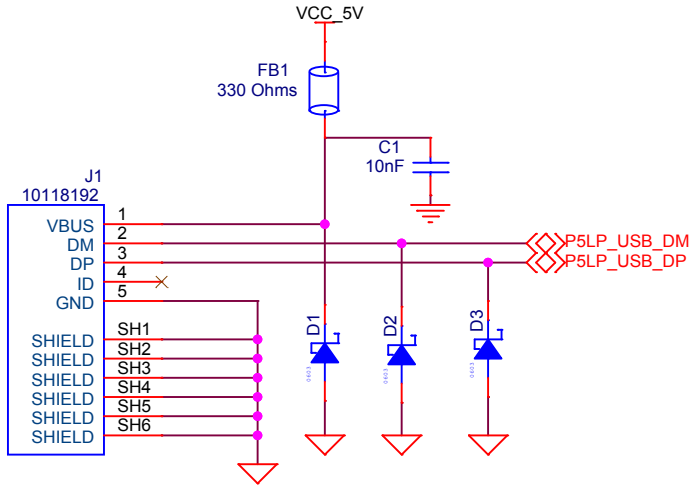

Power & Charging LED



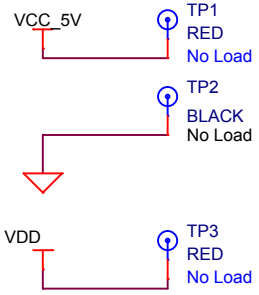

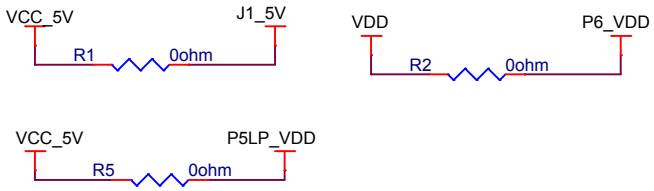

Voltage Monitoring

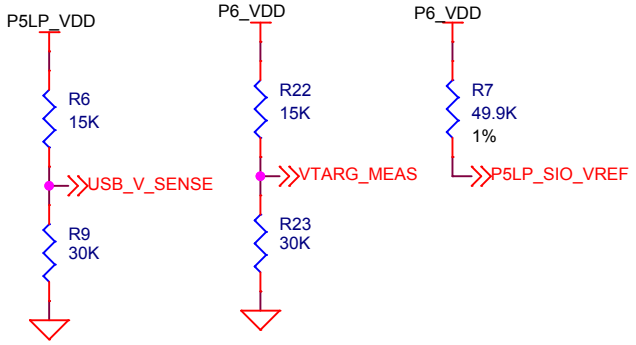

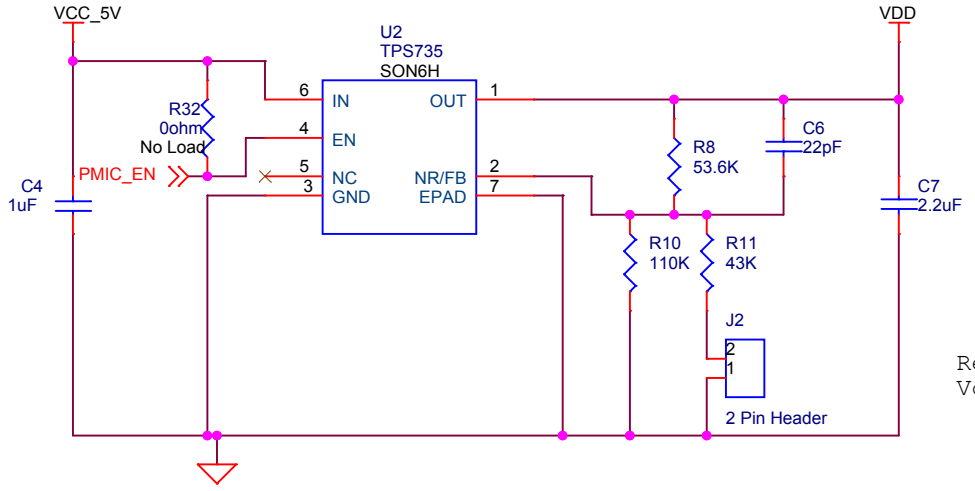

TABLE: VOLTAGE SELECTION JUMPER SETTINGS

JUMPER SETTING	O/P VOLTAGE
SHORT J2	3.3V
OPEN J2	1.8V

Regulator output is set to 3.3V. Can adjust as needed:
Vout = 1.208x(RFB1 + RFB2)/RFB2

Cypress Semiconductor		
Title: CYBLE-416045-EVAL		
Size: A4	Document Number: 630-20121-01	Rev: 1.1
Date: Friday, June 08, 2018	Sheet 1 of 3	

PSoC 5LP based KitProg2

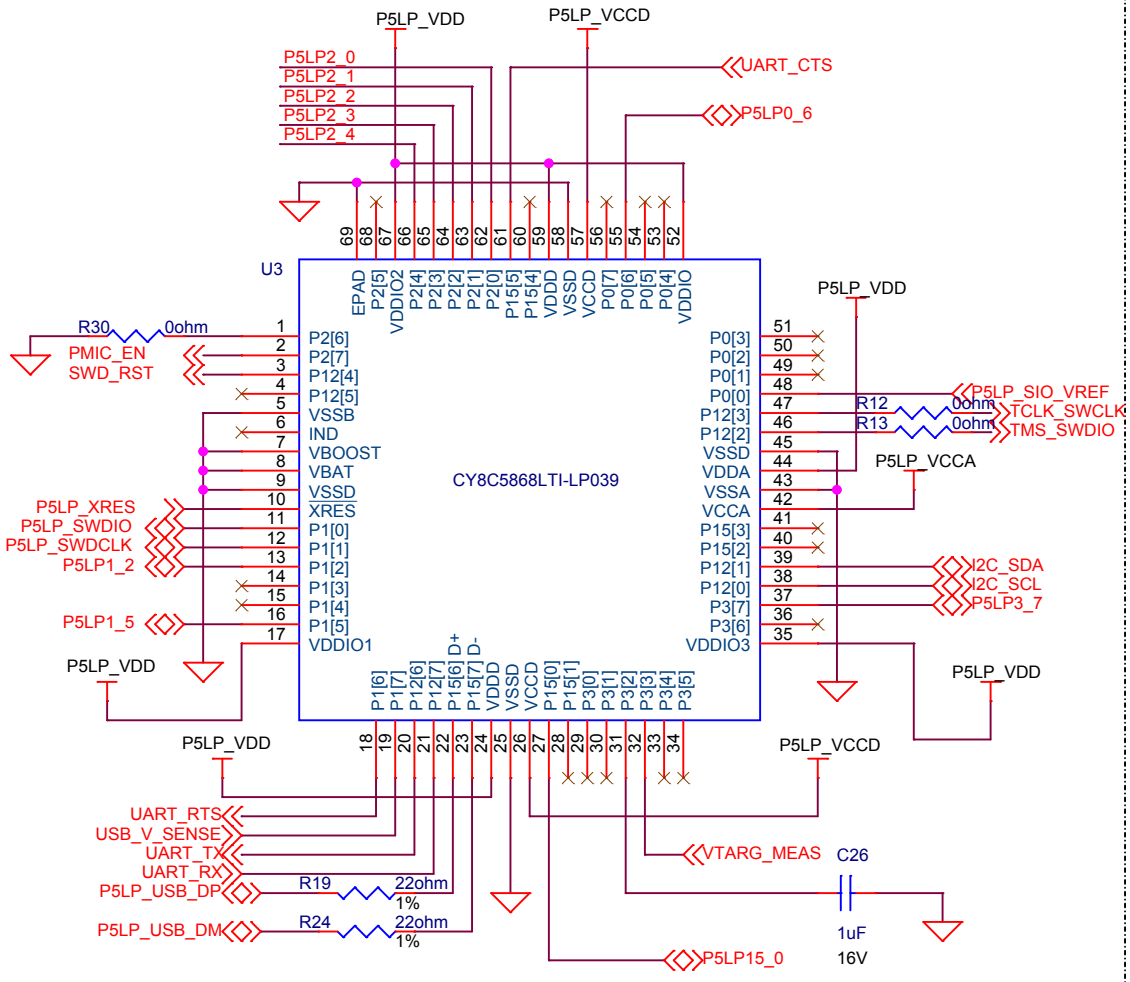

Decoupling Capacitors

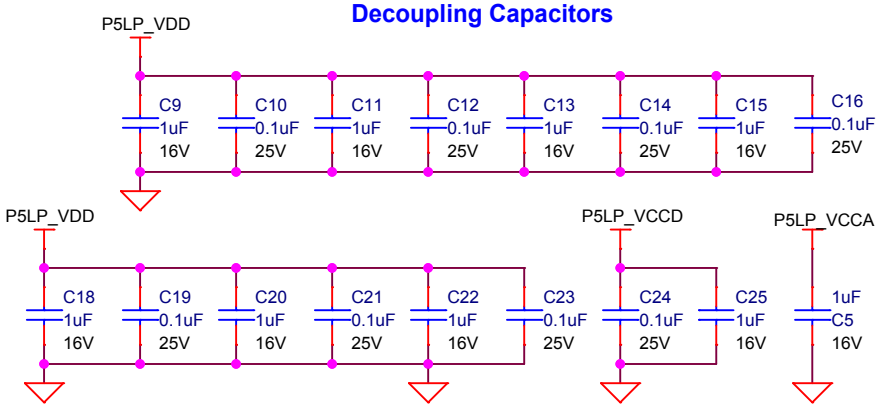

KitProg2 HW Revision

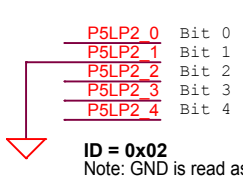

ID = 0x02
Note: GND is read as binary "1" and floating as "0"

SWD Interface



I2C Interface

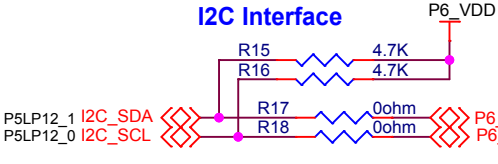

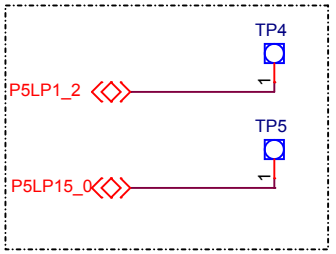

UART Interface

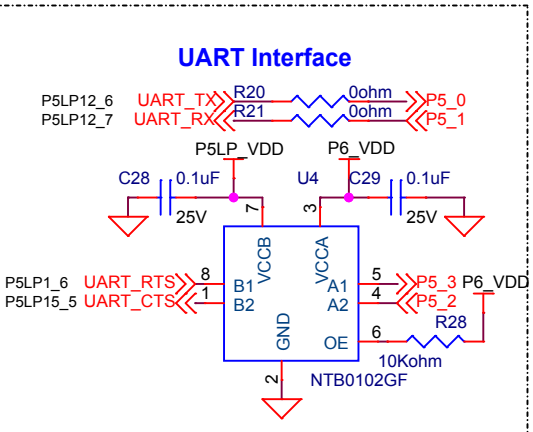

PSoC6 Program/Debug Header

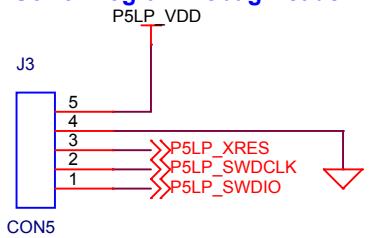

PSoC 5LP Programming LEDs



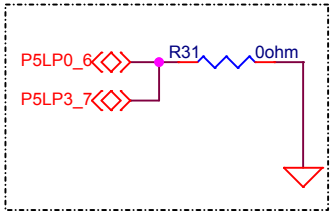

Cypress Semiconductor		
Title: CYBLE-416045-EVAL		
Size: A4	Document Number: 630-20121-01	Rev: 1.1
Date: Monday, June 11, 2018	Sheet 2 of 3	

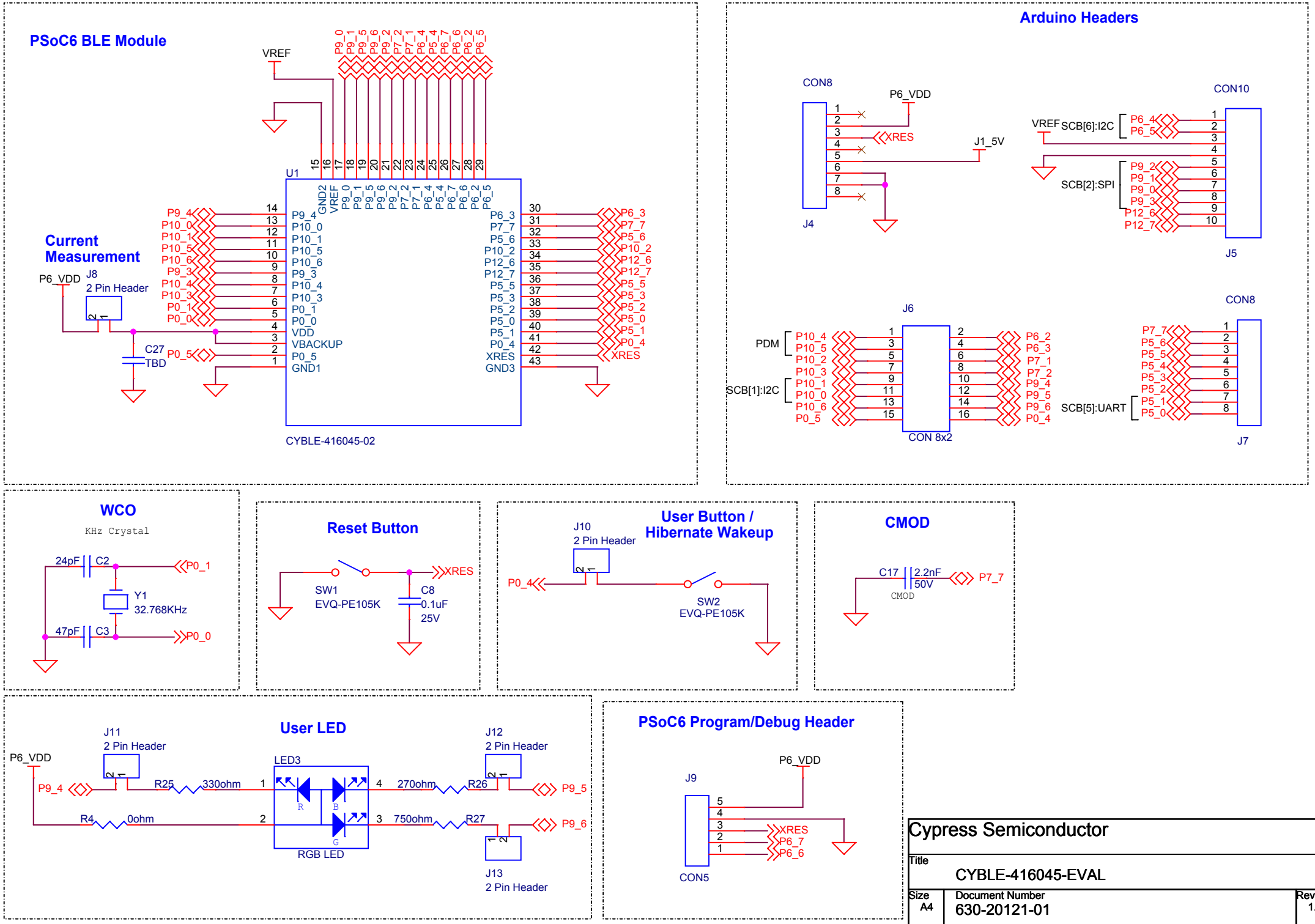
PSoC6 BLE Module
VREF
U1
CYBLE-416045-02
Current Measurement
P6_VDD
J8
2 Pin Header
C27
TBD
Arduino Headers
CON8
P6_VDD
XRES
J1_5V
J4
CON10
VREF
SCB[6]:I2C
SCB[2]:SPI
J5
J6
PDM
SCB[1]:I2C
CON 8x2
CON8
SCB[5]:UART
J7
WCO
KHz Crystal
24pF
C2
Y1
32.768KHz
47pF
C3
P0_1
P0_0
Reset Button
SW1
EVQ-PE105K
C8
0.1uF
25V
XRES
User Button / Hibernate Wakeup
J10
2 Pin Header
P0_4
SW2
EVQ-PE105K
CMOD
C17
2.2nF
50V
CMOD
P7_7
User LED
J11
2 Pin Header
P6_VDD
P9_4
R25
330ohm
R4
0ohm
LED3
RGB LED
R
G
B
J12
2 Pin Header
270ohm
R26
P9_5
750ohm
R27
P9_6
J13
2 Pin Header
PSoC6 Program/Debug Header
J9
P6_VDD
XRES
P6_7
P6_6
CON5
Cypress Semiconductor
Title
CYBLE-416045-EVAL
Size
A4
Document Number
630-20121-01
Rev
1.1
Date:
Monday, June 11, 2018
Sheet
3
of
3